BAP1K SERIES

DC/ DC Converter: 1000 Watts

HELIOS POWER SOLUTIONS
www.heliosps.com.au

Features

- 24- 160vdc Input options
- 1000 watts output power
- Over voltage protection
- Overload and short circuit protection
- MTBF > 130,000hrs
- Any output from 24vdc ~ 130vdc possible
- **N+1** Redundancy Applications – option
- Output DC Fail alarm -Option
- Battery Charging applications - Option

General Specifications

Input Voltage	**24VDC** (21-30) **48VDC** (42-60) **120VDC** (95-140) • Other voltage input options on request
Input Protection	Reverse polarity protection. Inrush current limiting Input Fuse
Isolation	Input - Output 2250vdc Input - Chassis 1500vdc Output – Chassis 500vdc
Efficiency	Model dependent , typically 80%
Output voltage	See tables
Output Power	1000 watts
Parallel Operation	Optional
Voltage adjustment	Typically 5% (Other options on request)
Output Ripple/Noise	Better than 1% of output voltage peak to peak or 0.2% rms of the output voltage (20MHZ BW)
Line / Load Regulation	± 1% combined
Dynamic Load Response	Max 5% voltage deviation for 10% to 50% load step, with better than 1msec recovery time.
Output Protection	Over voltage protection Constant Current limiting & short circuit protection Thermal shutdown with auto recovery.
EMI	EN55022 class A
Immunity	EN61000-4
Shock & Vibration	Designed to meet IEC61373 Cat 1 A & B
Operating Temp.	0°C to +50°C at full load. +70ºC at 50% load.
Cooling	By built-in fan
Dimensions	127 x 127 x 314mm 5.5kg

Description

The **BAP1K** Series DC/DC converter, is part of a family of industrial dc/dc converters, providing 1000 watts of output power.

It is a mature design with a proven track record in many applications. The unit is equipped with reverse polarity protection on the input, surge protection and input & output filtering.

Cooling is by built-in fan and optional ruggedizing & conformal coating is available, for immunity to shock, vibration, humidity, moisture, dust and insects.

An optional redundancy diode allows parallel connection to achieve higher output power or N+1 redundancy. This chassis-mount design is optimized for low component count and high efficiency.

Options

Output Voltage	Special voltage output, up to 130VDC
Alarm	Voltage Free contacts
N+1 Redundancy	Output redundancy diode for parallel operation

Model	Input V	Output V	Output A	Power W
BAP1K-24-12UT	24V	12V	80A	1000W
BAP1K-24-24UT	24V	24V	40A	
BAP1K-24-48UT	24V	48V	20A	
BAP1K-24-120UT	24V	120V	8.3A	
BAP1K-48-12UT	48V	12V	80A	
BAP1K-48-24UT	48V	24V	40A	
BAP1K-48-48UT	48V	48V	20A	
BAP1K-48-120UT	48V	120V	8.3A	
BAP1K-120-24UT	120V	24V	40A	
BAP1K-120-48UT	120V	48V	20A	

Note:

1. Any input / output voltage is available 24-130vdc
2. Final part no will be allocated at time of order

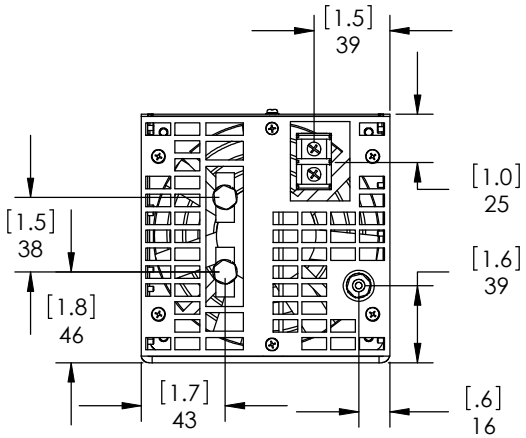

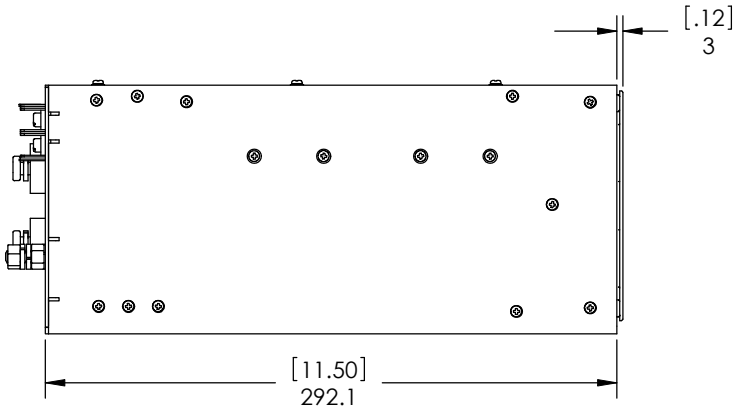

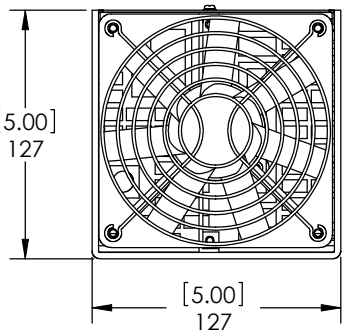

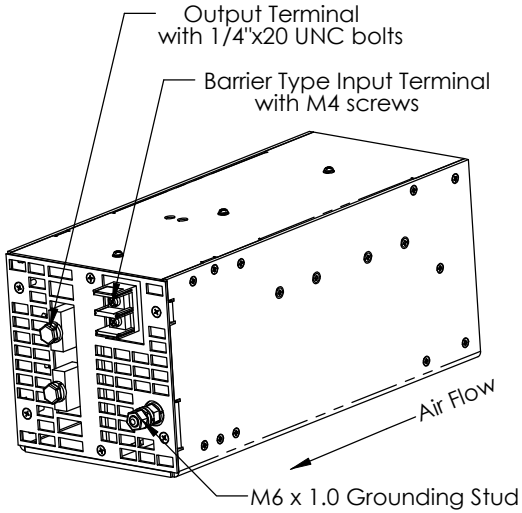

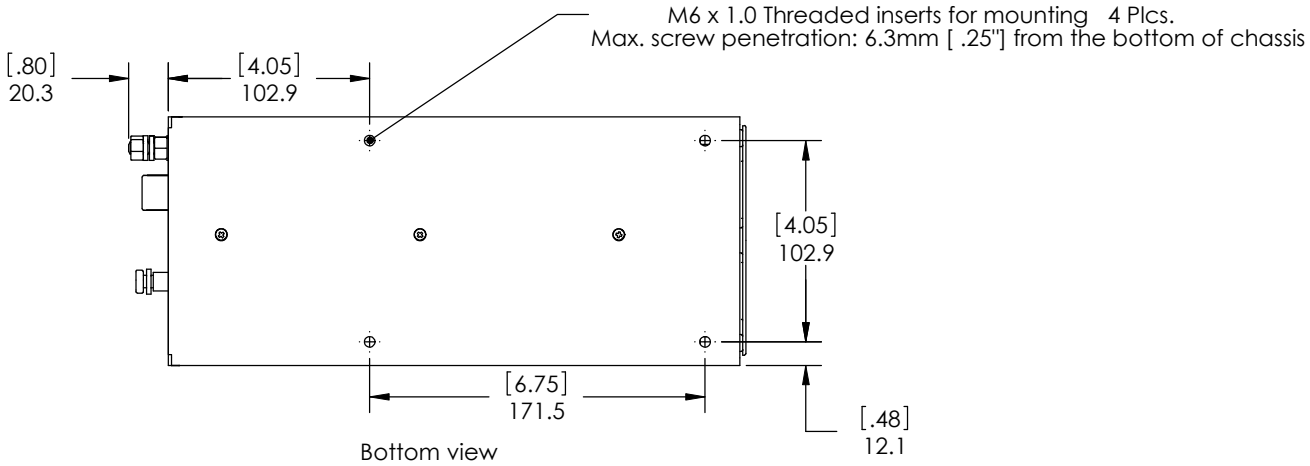

Weight: 4.5Kg [10lbs.]

DIMENSIONS ARE IN MILLIMETERS
[INCHES] TOLERANCES ON
DECIMALS: XXX ± 0.2mm
XX ± 0.3mm
ANGLES: ± 2°
FRACTIONS: ± 0.4mm
UNLESS OTHERWISE STATED

Title: OUTLINE DRAWING

Model No: U5512

AMTEX ELECTRONICS PTY LTD
www.amtex.com.au